VBS -3.0 SQ OUTDOOR POWER VOLLEYBALL SYSTEM

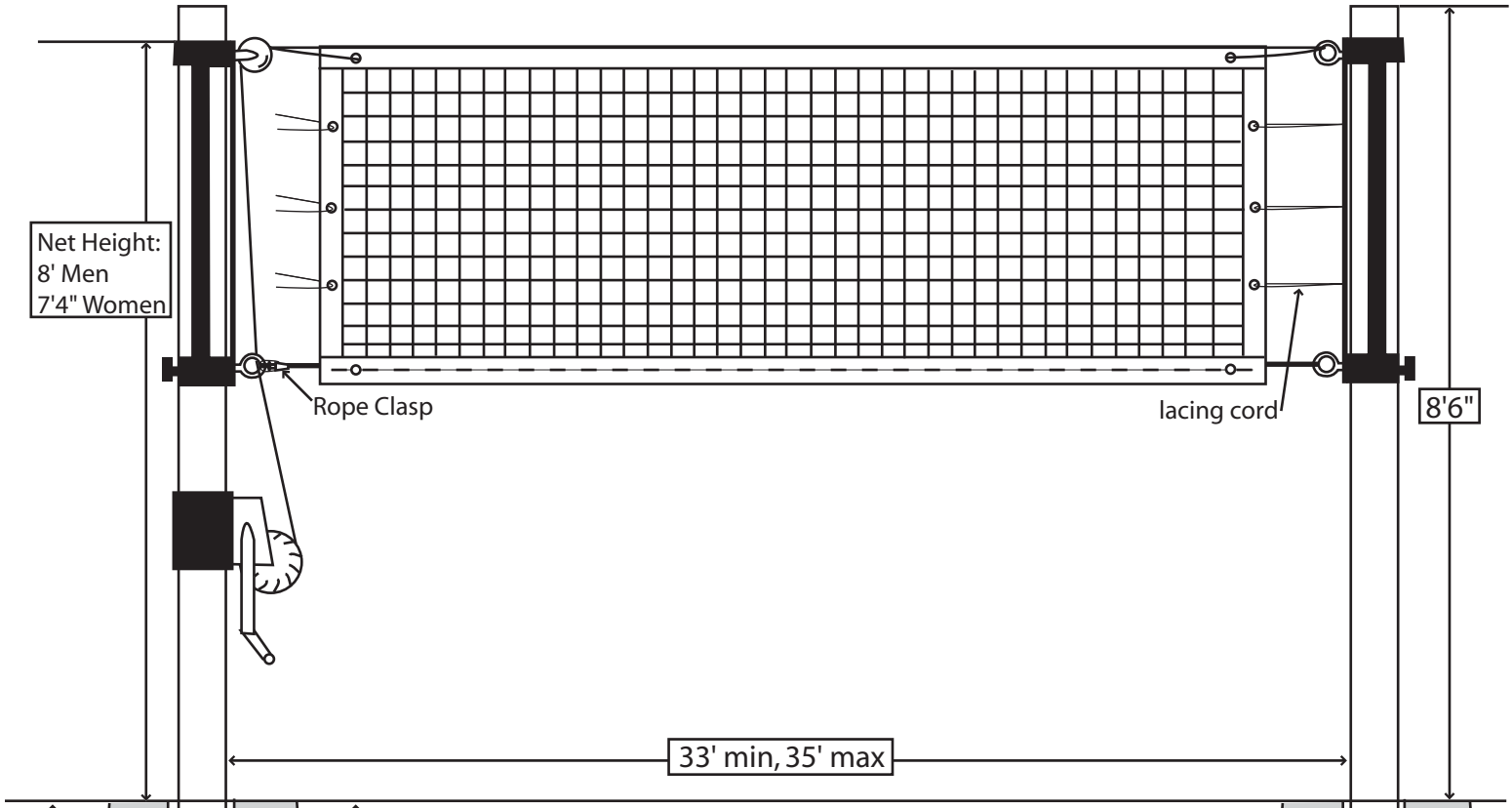

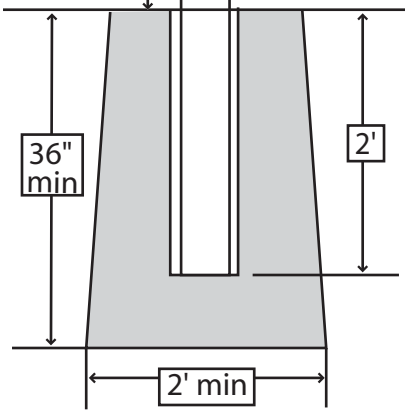

Parts List:
1 Adjustable Collar Pulley Top
1 Adjustable Collar
1 Reels w/ Collar
2 3" Square Poles 10' 6" Long
1 VB-1200 RB Volleyball Net
2 Pole Caps
1 Rope Clasp
2- 15' lacing cord

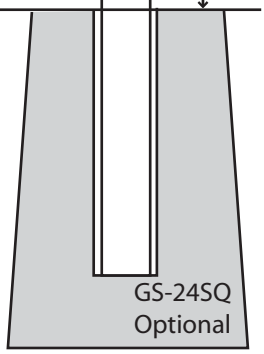

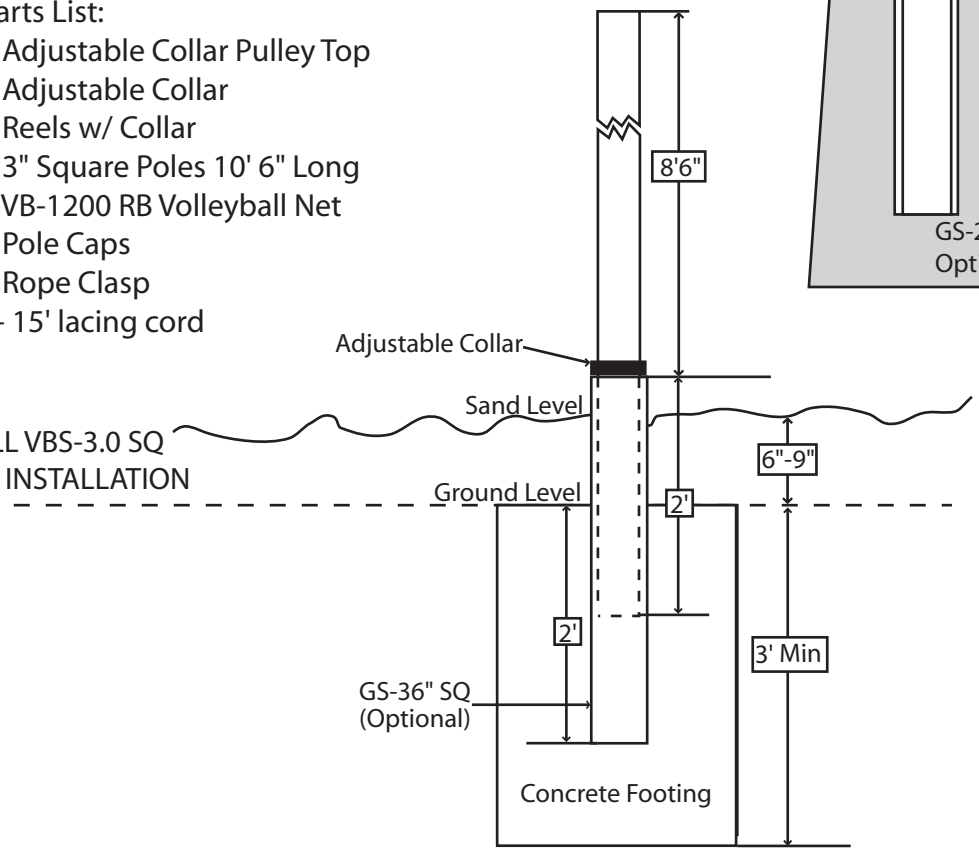

SAND VOLLEYBALL VBS-3.0 SQ
GROUND SLEEVE INSTALLATION

douglas®

Manufactured by Douglas Industries, Inc.